THIS DRAWING AND SPECIFICATIONS, HEREIN, ARE THE PROPERTY OF DATA GENERAL CORPORATION AND SHALL NOT BE REPRODUCED OR COPIED OR USED IN WHOLE OR IN PART AS THE BASIS FOR MANUFACTURE OR SALE OF ITEMS WITHOUT WRITTEN PERMISSION.

REVISIONS

REV	DESCRIPTION	DRFTG	APP BY	DATE
02	ECO # 118	M.J.W.	MSC	12-16-70
03	ECO # 261	RHS		5-10-71
04	Q1 TO 2N4403 / ECO # 250	RHS		6/28/71
05	ECO # 407	W.J.G.		8/5/71

SEE BELOW

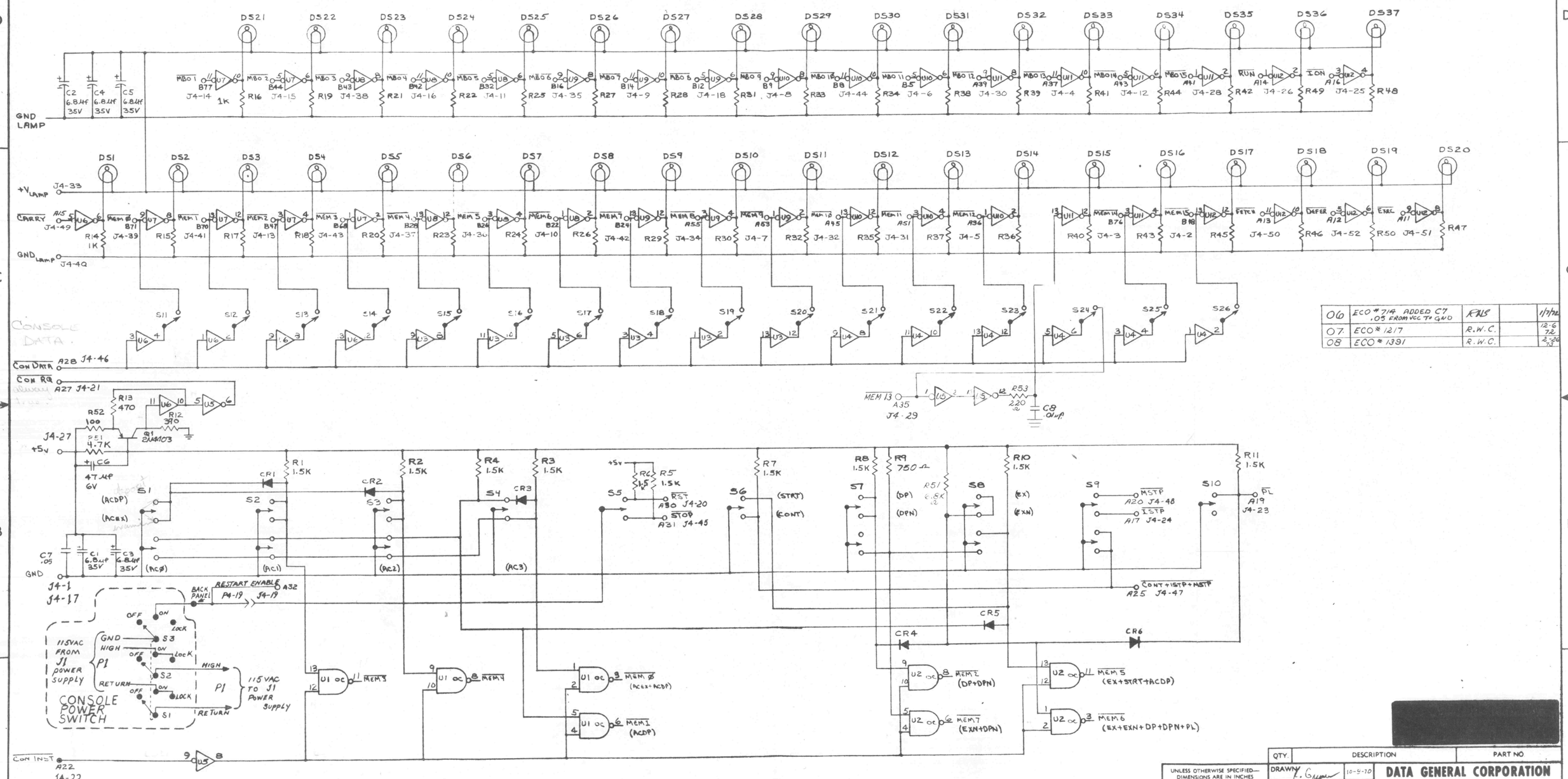

06	ECO # 714 ADDED C7 .05 FROM VCC TO GND	RHS		1/7/72
07	ECO # 1217	R.W.C.		12-6-72
08	ECO # 1391	R.W.C.		2-26-73

[redacted]

QTY.	DESCRIPTION	PART NO

UNLESS OTHERWISE SPECIFIED— DIMENSIONS ARE IN INCHES TOLERANCES ON FRACTIONS ± DECIMALS .XX ± .XXX ± ANGLES ± PARTS TO BE FREE FROM BURRS BREAK ALL EDGES .010

UNLESS OTHERWISE SPECIFIED - ALL MACH. SURFACES ✓

MATERIAL

FINISH

DRAWN K. Gunn 10-9-70

CHECKED K. Fenck 12/8/70

ENGINEER K. Gunn 12/8/70

APPROVED

FIRST USED ON 077 107-000/33

SCALE

DATA GENERAL CORPORATION
SOUTHBORO, MASSACHUSETTS 01772

TITLE
NOVA 800/1200
CONSOLE

SIZE	CODE	DRAWING NUMBER	REV
D	001	000089	08

SHEET 1 OF 1