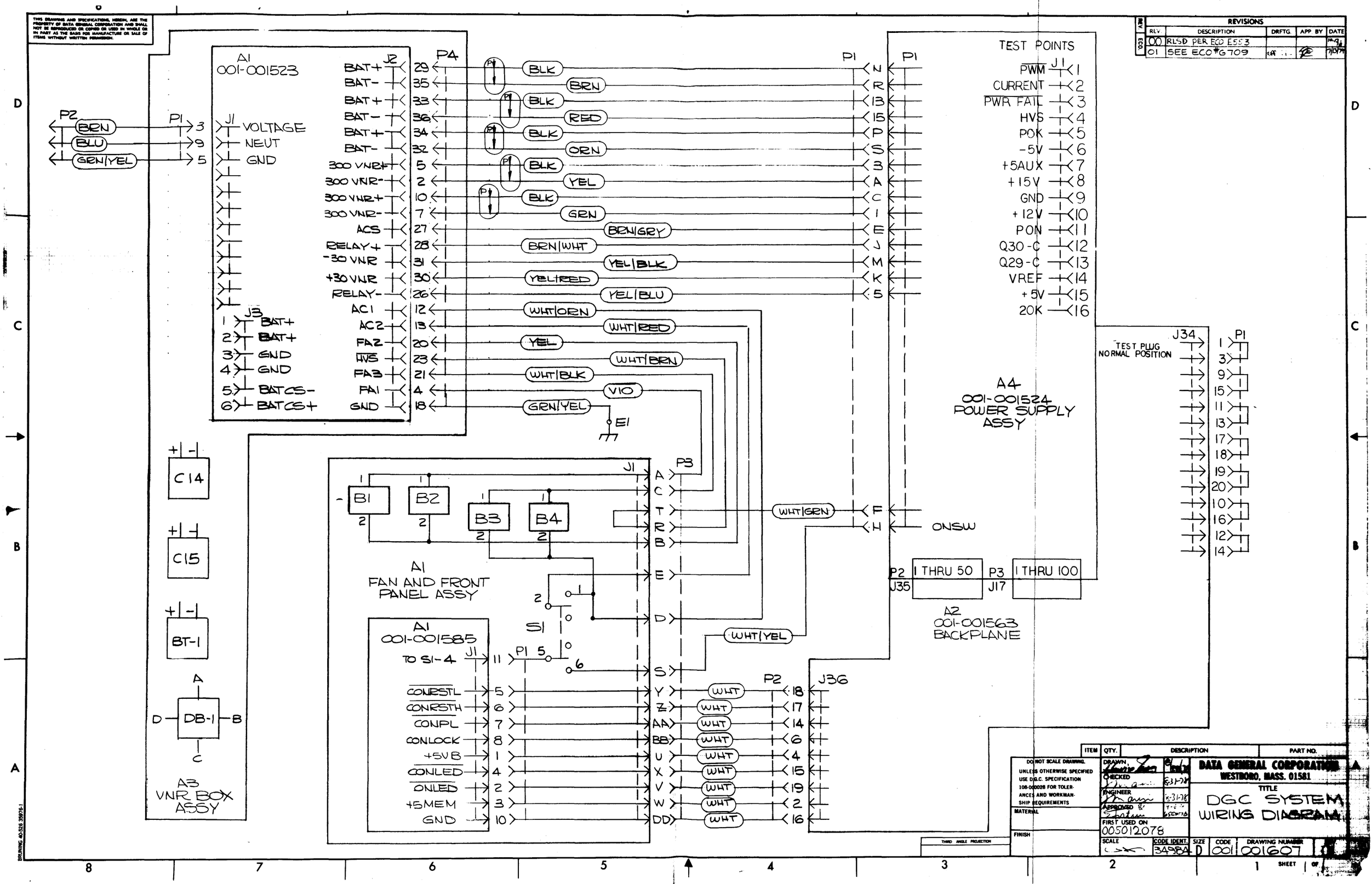

THIS DRAWING AND SPECIFICATIONS, HEREIN, ARE THE PROPERTY OF DATA GENERAL CORPORATION AND SHALL NOT BE REPRODUCED OR COPIED OR USED IN WHOLE OR IN PART AS THE BASIS FOR MANUFACTURE OR SALE OF ITEMS WITHOUT WRITTEN PERMISSION.
REVISIONS
REV. DESCRIPTION DRFTG. APP. BY DATE
00 RLSD PER ECO E553
01 SEE ECO #G709
A1 001-001523
J1 VOLTAGE NEUT GND
J2 BAT+ BAT- BAT+ BAT- BAT+ BAT- 300 VNR+ 300 VNR- 300 VNR+ 300 VNR- ACS RELAY+ -30 VNR +30 VNR RELAY- AC1 AC2 FA2 HVS FA3 FA1 GND
J3 BAT+ BAT+ GND GND BATCS- BATCS+
P2 BRN BLU GRN/YEL
P1
P4
BLK BRN BLK RED BLK ORN BLK YEL BLK GRN BRN/GRY BRN/WHT YEL/BLK YEL/RED YEL/BLU WHT/ORN WHT/RED YEL WHT/BRN WHT/BLK VIO GRN/YEL
E1
TEST POINTS
J1 PWM CURRENT PWR FAIL HVS POK -5V +5AUX +15V GND +12V PON Q30-C Q29-C VREF +5V 20K
A4 001-001524 POWER SUPPLY ASSY
J34 TEST PLUG NORMAL POSITION
C14 C15 BT-1 DB-1
A3 VNR BOX ASSY
B1 B2 B3 B4
A1 FAN AND FRONT PANEL ASSY
S1
A1 001-001585
TO S1-4
CONRSTL CONRSTH CONPL CONLOCK +5VB CONLED ONLED +5MEM GND
P3 WHT/GRN WHT/YEL
ONSW
P2 J35 1 THRU 50 P3 J17 1 THRU 100
A2 001-001563 BACKPLANE
P2 J36
WHT
ITEM QTY. DESCRIPTION PART NO.
DO NOT SCALE DRAWING. UNLESS OTHERWISE SPECIFIED USE D.G.C. SPECIFICATION 108-000028 FOR TOLERANCES AND WORKMANSHIP REQUIREMENTS
MATERIAL
FINISH
THIRD ANGLE PROJECTION
DRAWN CHECKED ENGINEER APPROVED
FIRST USED ON 005012078
DATA GENERAL CORPORATION WESTBORO, MASS. 01581
TITLE DGC SYSTEM WIRING DIAGRAM
SCALE CODE IDENT. 34984 SIZE D CODE 001 DRAWING NUMBER 001607
SHEET OF
BRUNING 40-526 35976-1